The Cycloidal Rotor: Airships and Vertical Flight Systems

AlaskaWorks Engineering
Geophysical Institute
Principal Investigator, Roger Smith
Project Manager, John Collette

GEOPHYSICAL INSTITUTE
CAL POLY
MARYLAND
Acuity

Cycloidal Basics

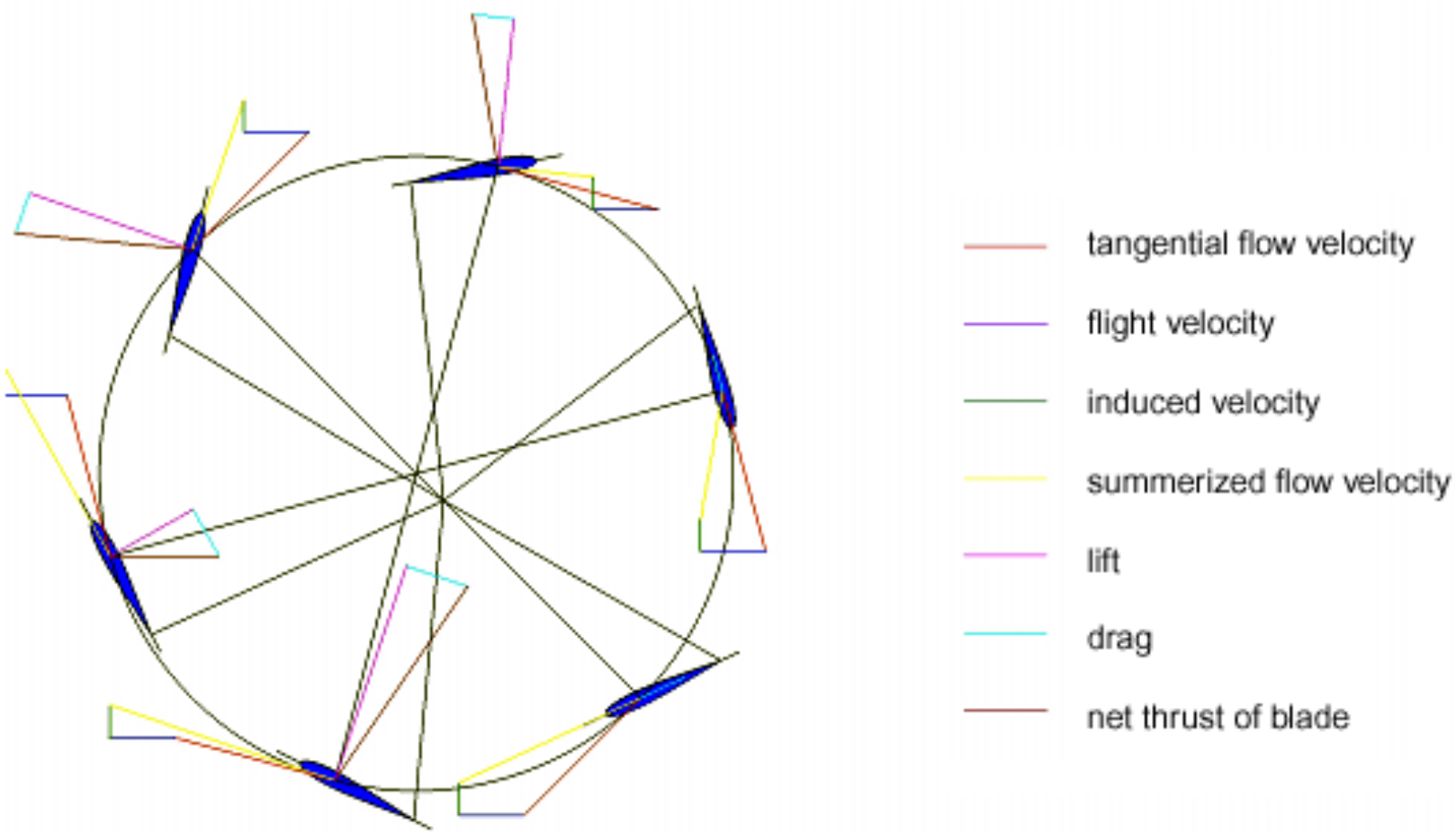

Voith-Schnieder Marine Drive

Prince William Sound

TAN'ERLIO
TAN'ERLIO
TAN'ERLIO

POPULAR SCIENCE MONTHLY

NOVEMBER

15 CENTS

20 CENTS IN CANADA

NRA CODE

NOW 15¢

20 CENTS IN CANADA

See Page 43

NEW INVENTIONS · MECHANICS · MONEY MAKING IDEAS
HOME WORKSHOP PLANS AND HINTS · 350 PICTURES

This cycloidal propeller, 15 ft. in diameter, was built for Prof. Kirsten's experiments. It was powered by a 400 h.p. Wright aviation engine. Each blade is 22 inches wide and 54 inches long. It has 24 blades. In tests the entire propeller made about 80 r.p.m.

Linde

scale = 4'

Ultralight Cycle Exoskeleton 6/6/01

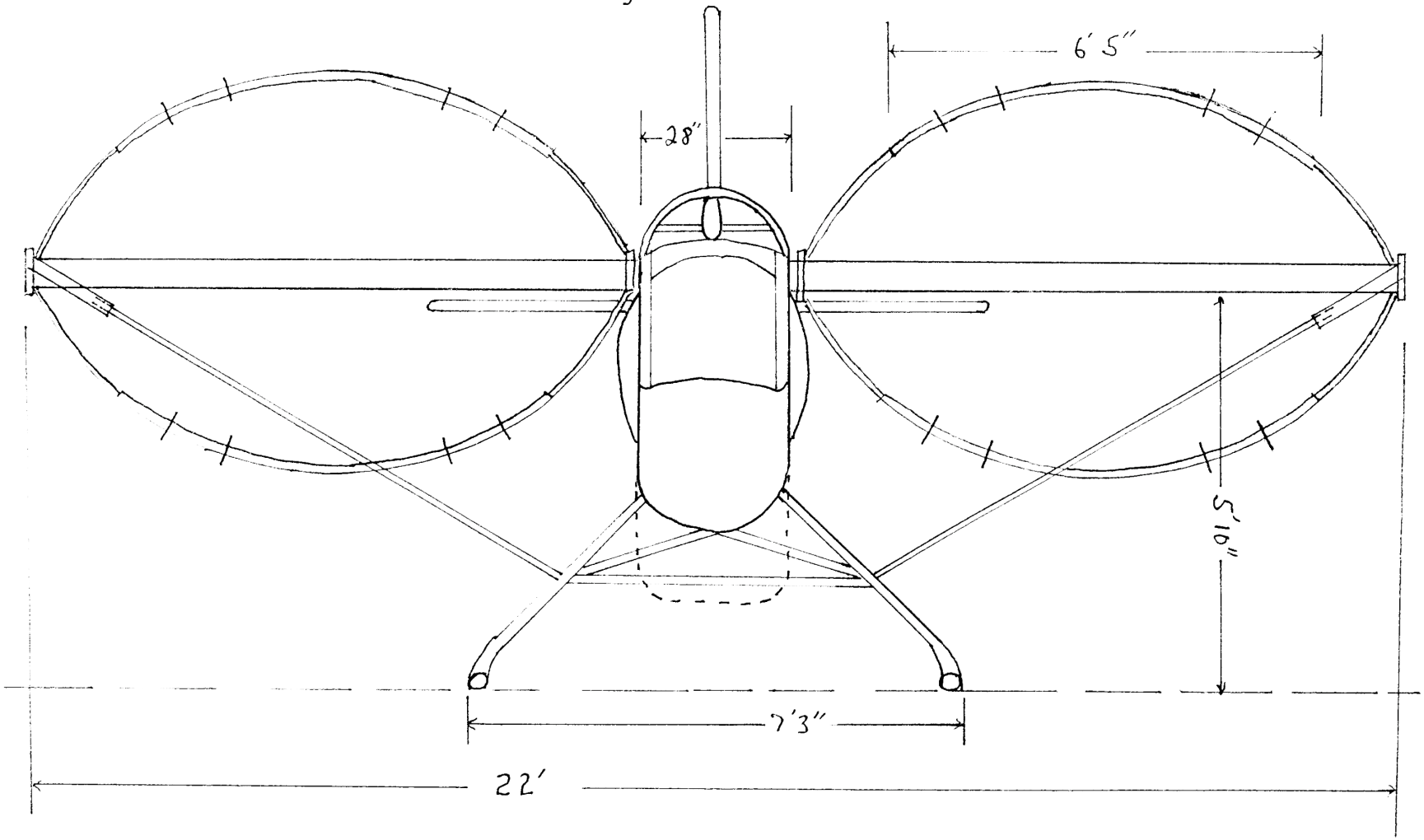

Sc 2"=4'

Ultralight Cycloid Exoskeleton 6/6/01

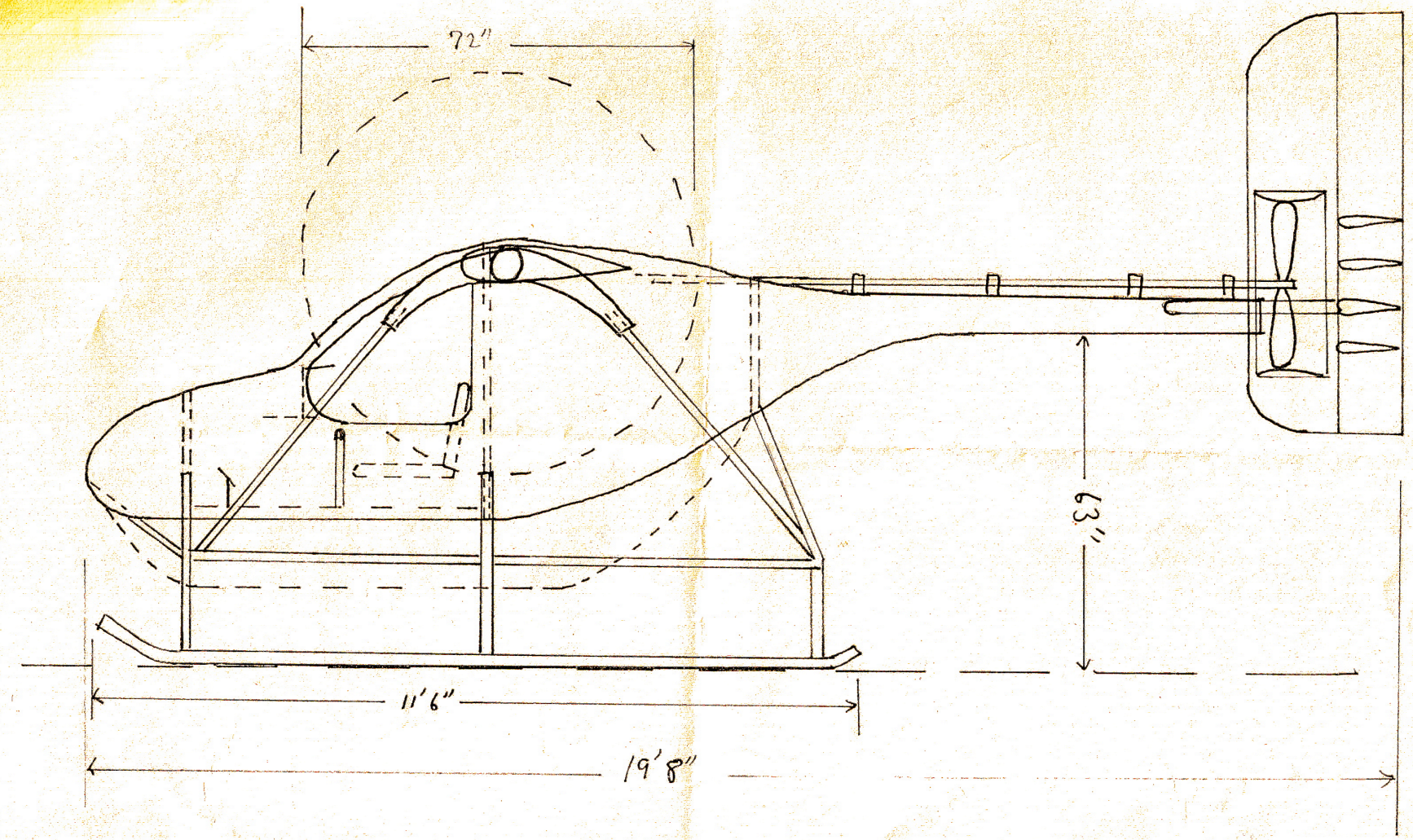

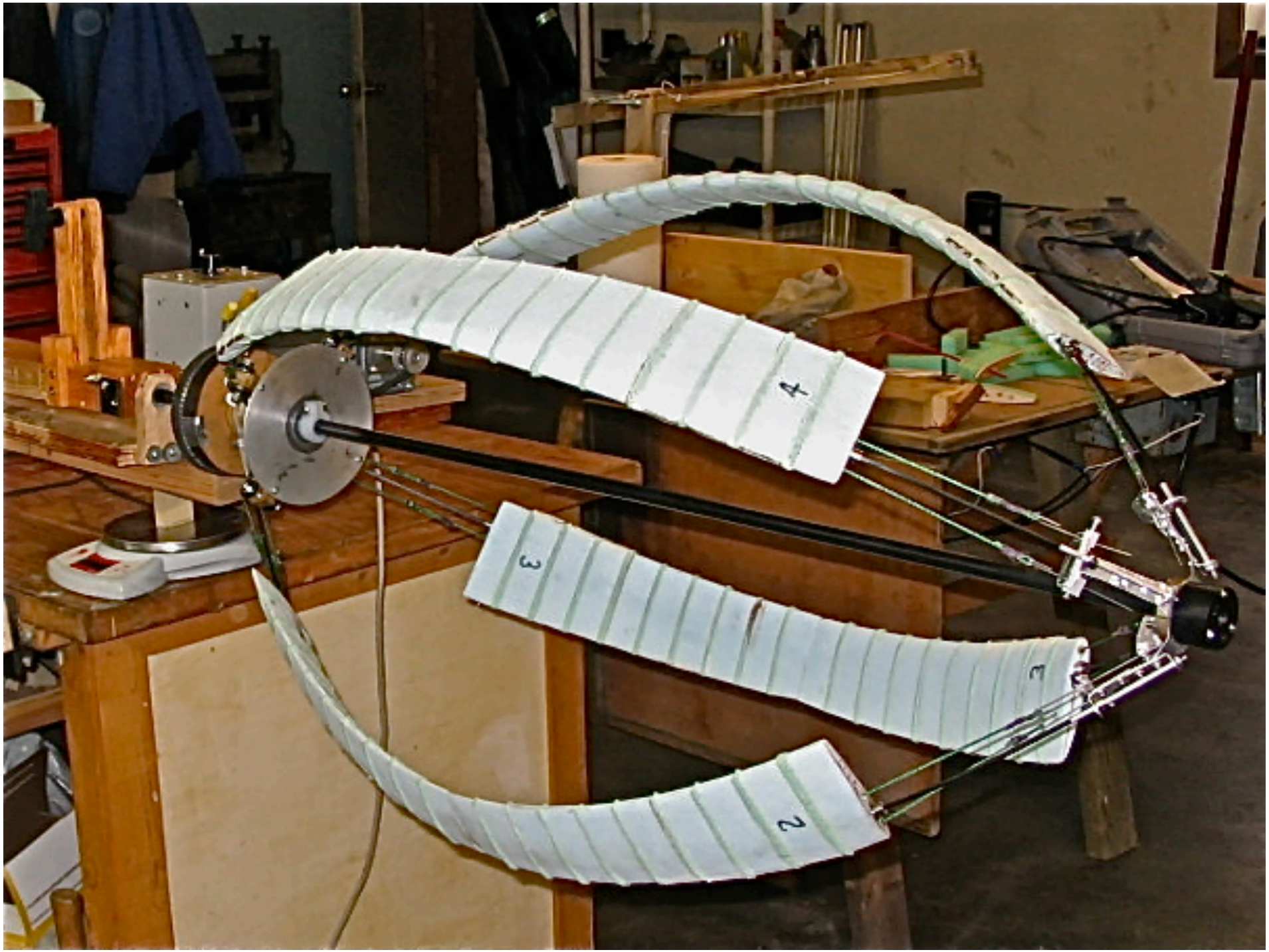
4
3
2

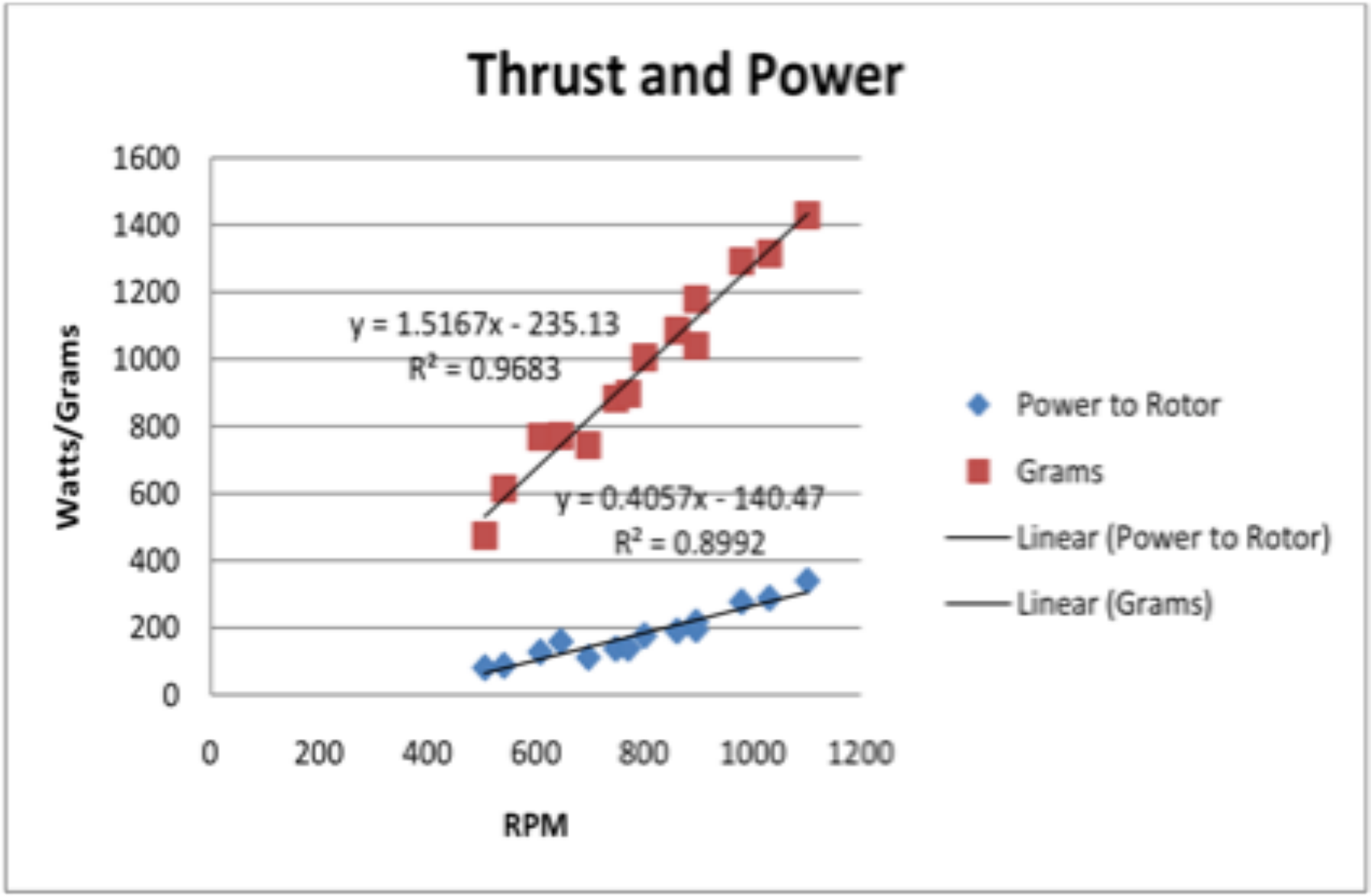
Thrust and Power
Watts/Grams
1600
1400
1200
1000
800
600
400
200
0
0
200
400
600
800
1000
1200
RPM
y = 1.5167x - 235.13
R² = 0.9683
y = 0.4057x - 140.47
R² = 0.8992
Power to Rotor
Grams
Linear (Power to Rotor)
Linear (Grams)

Sandia National Lab Offshore Wind Study: VAWT up to 8 Megawatts

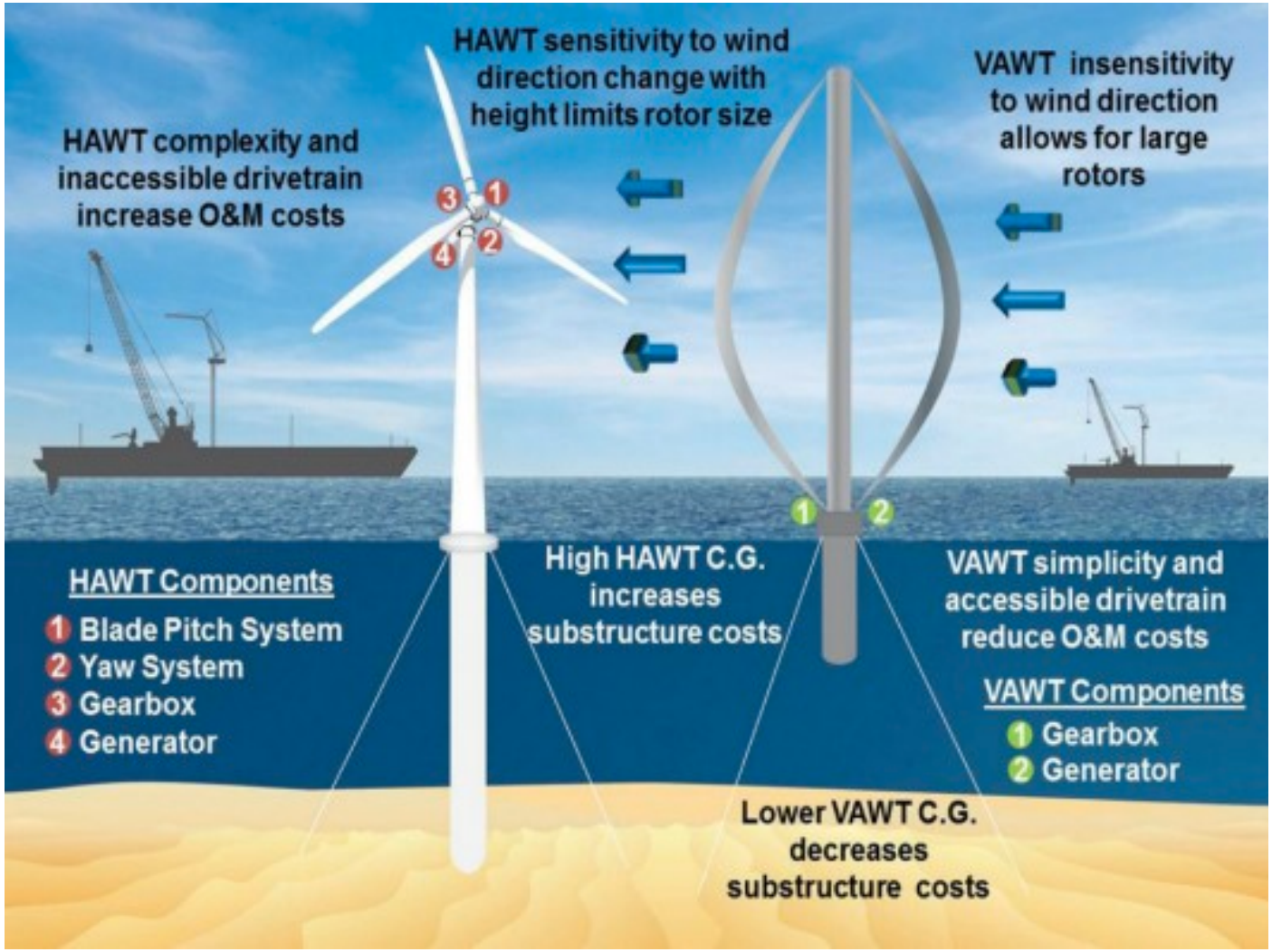

Maximum Size Possible- 975 ft. Central Mast

THE COLLETTE CYCLOIDAL ROTOR: A NEW WAY TO FLY

John Collette
AlaskaWorks Engineering
Fairbanks, Alaska
Email: gnordic@acsalaska.net