NORTHROP GRUMMAN

DEFINING THE FUTURE

Future Deployment Systems And Very Large Fairings

Ares V Workshop

April 26-27, 2008

Chuck Lillie, Dean Dailey, Ron Polidan

Northrop Grumman Space Technology

Outline

- Large Space Observatory Expectations for the Next Decades
- Current State of the Art
- Future Deployment Systems for Very Large Fairings
  - Chord-Fold (JWST Architecture)
  - Stacked Hex (Larger, lighter weight)
  - Fan Fold (Most efficient packaging)
- Fairing Dimensions
- Summary

Large Space Observatory Expectations for the Next Decades

NORTHROP GRUMMAN

- JWST, on plan to launch in 2013, breaks the cost/aperture scaling "relationship" that is often quoted (usually cost ~ aperture$^{2.5}$)
  - Hubble (1990): 2.4 m aperture, 11,110 kg total mass, $4.1 B (FY06, A-D)
  - JWST (2013): 6.5 m aperture, 6,200 kg total mass, $3.5 B (FY06, A-D)

    (for comparison Chandra has a mass of 4800 kg and a cost of ~$4 B)

  So, clearly such a scaling law does not exist, unless you want to believe that the exponent should be near 0 or even negative!!
- The primary reason for this is that new approaches and technologies change the fundamental architecture of big space telescopes and this changes the cost relationship
- In the next decades further technology development plus infrastructure changes will continue to improve our ability to produce cost effective big observatories. Things such as:
  - Ares V and other heavy lift launch vehicles
  - Advanced optics technology (ultra-light weight mirrors, replication, improved wavefront sensing and control technologies, etc ...)
  - Advanced deployment and assembly (robotic or crewed) technologies

Affordable Large Observatories are Possible in the late-2010's & 2020's

Current State of the Art: JWST

NORTHROP GRUMMAN

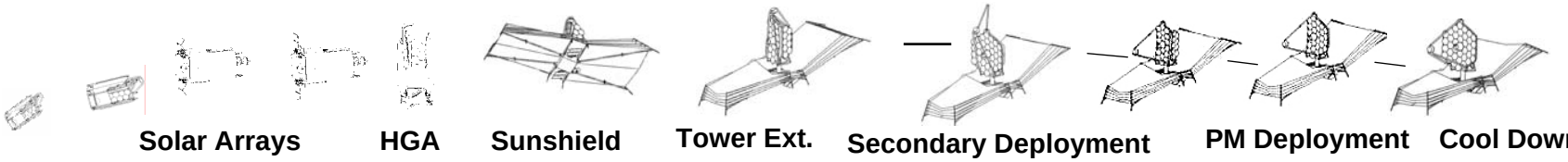

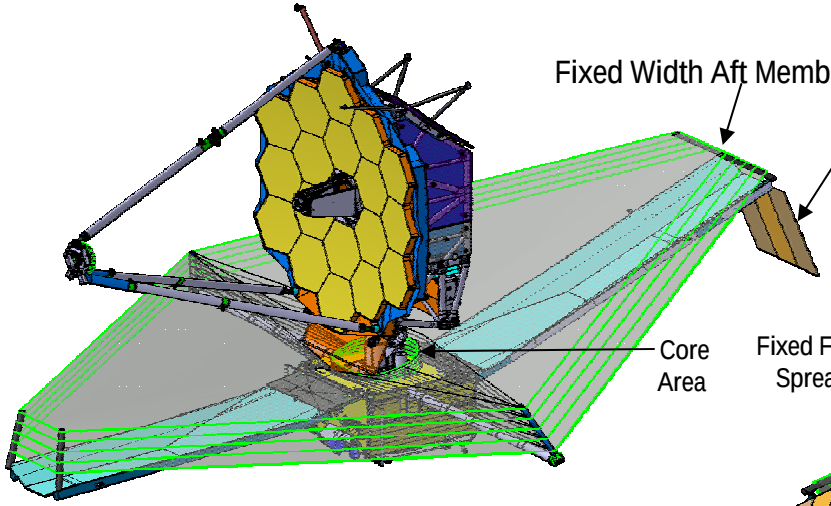

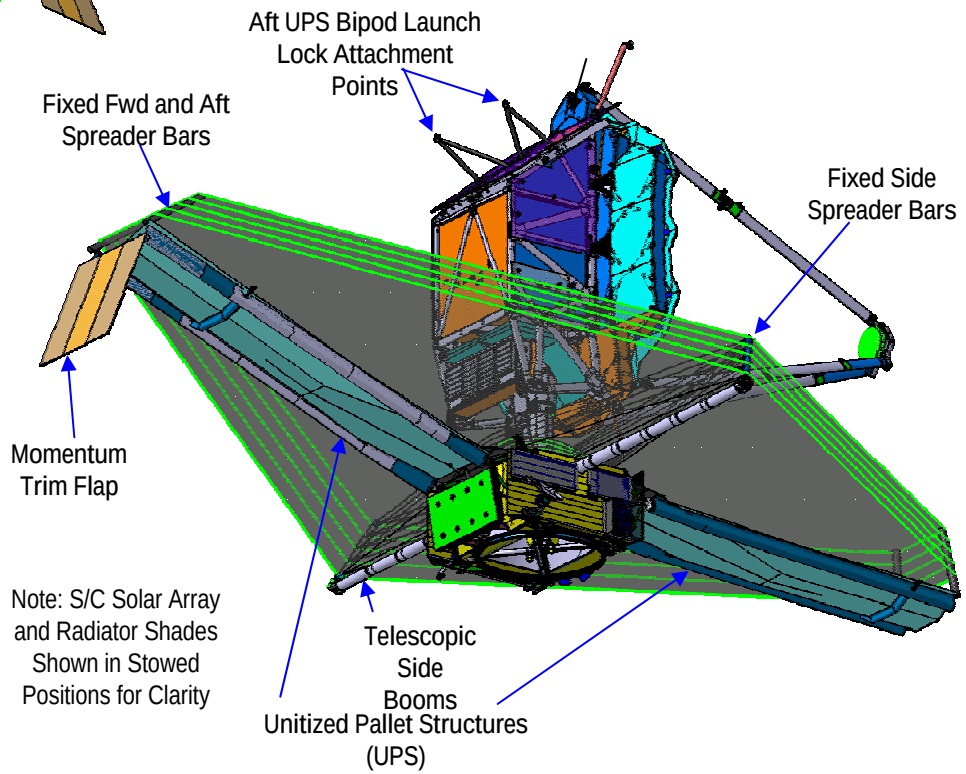

- **Successor to Hubble Space Telescope,**
- **Mission to observe the formation of the first stars and galaxies the early universe, 13 billion years in the past**
- **Passed PDR and NAR in April 2008**
- **Telescope: deployable 6.5 m beryllium mirror**
- **10-m x 22-m sunshield for thermal control**
- **Wavelength coverage: 0.6 to 28 μ**
- **Optical Resolution: 0.1 arcsec at 2 μ**
- **Passively cooled: to <50 Kelvin**
- **Lifetime: 10 years**
- **Launch in 2013 to L2 halo orbit**

16.8 m Telescope With "Chord-Fold" Deployment System

NORTHROP GRUMMAN

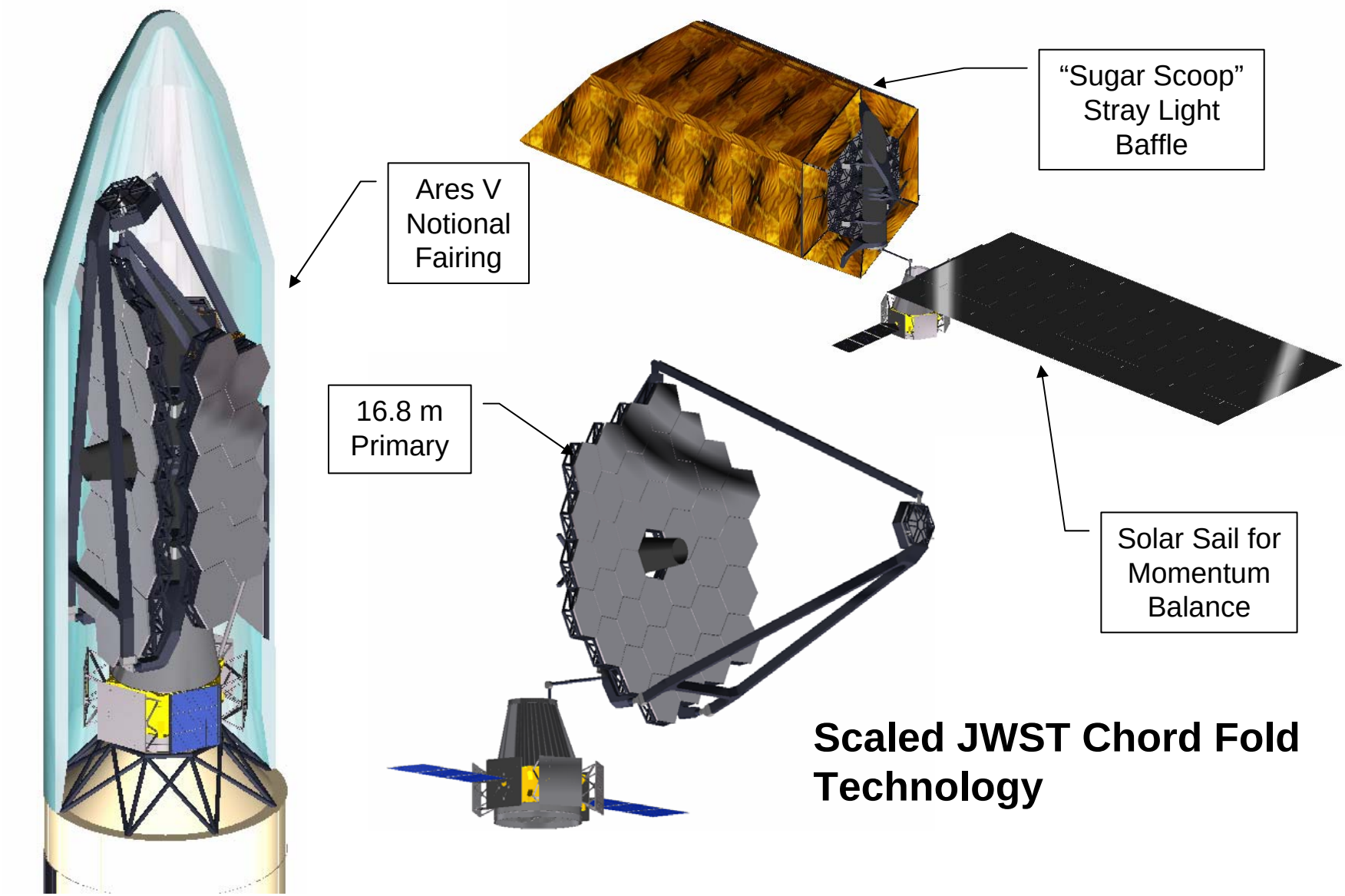

Scaled JWST Chord Fold Technology

16.8 m – Dimensions

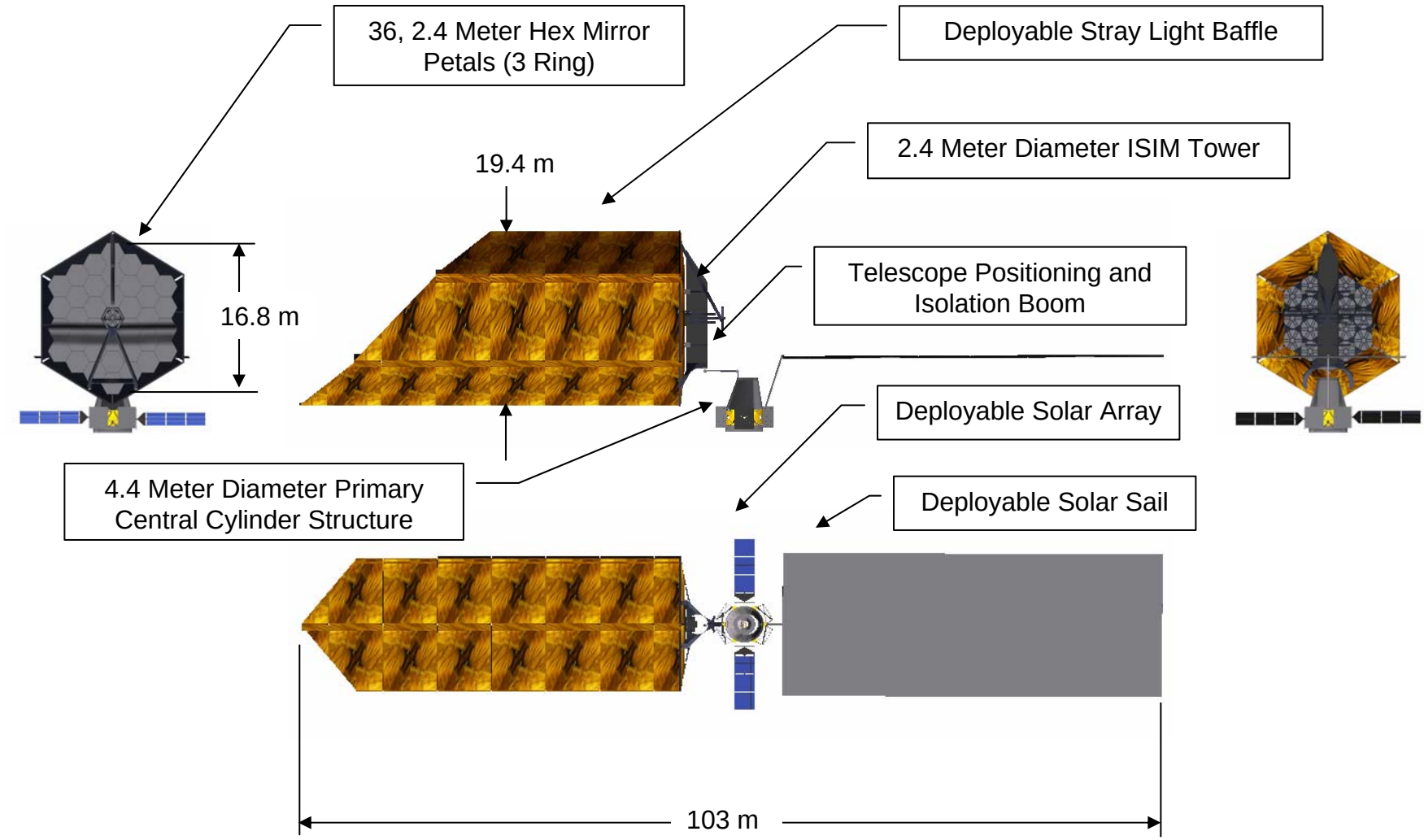

Very preliminary analysis suggests that 16.8 m will fall within the Ares V lift capacity

21 Meter Stacked Hex Deployment Concept

Ares V "Notional Fairing"

Seven 8-m pt-pt Hexagonal Mirror Segments

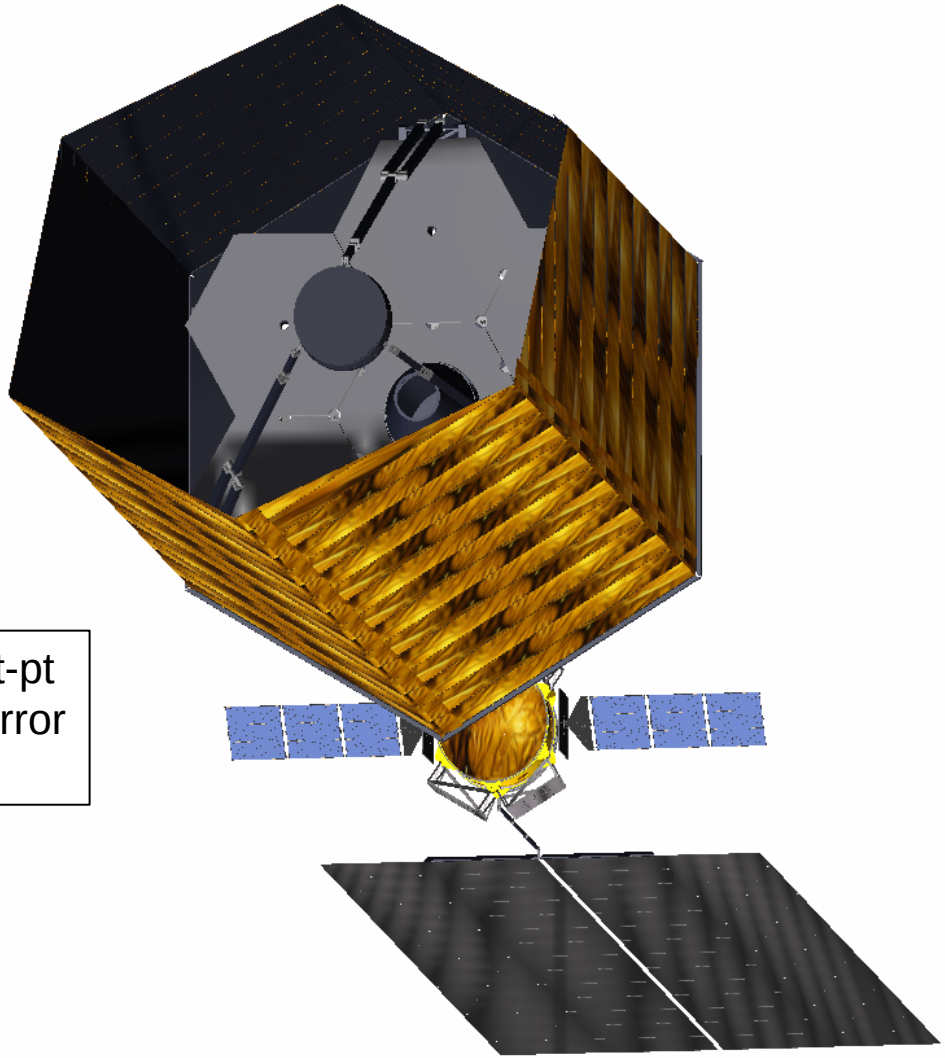

21 Meter Stacked Hex Telescope

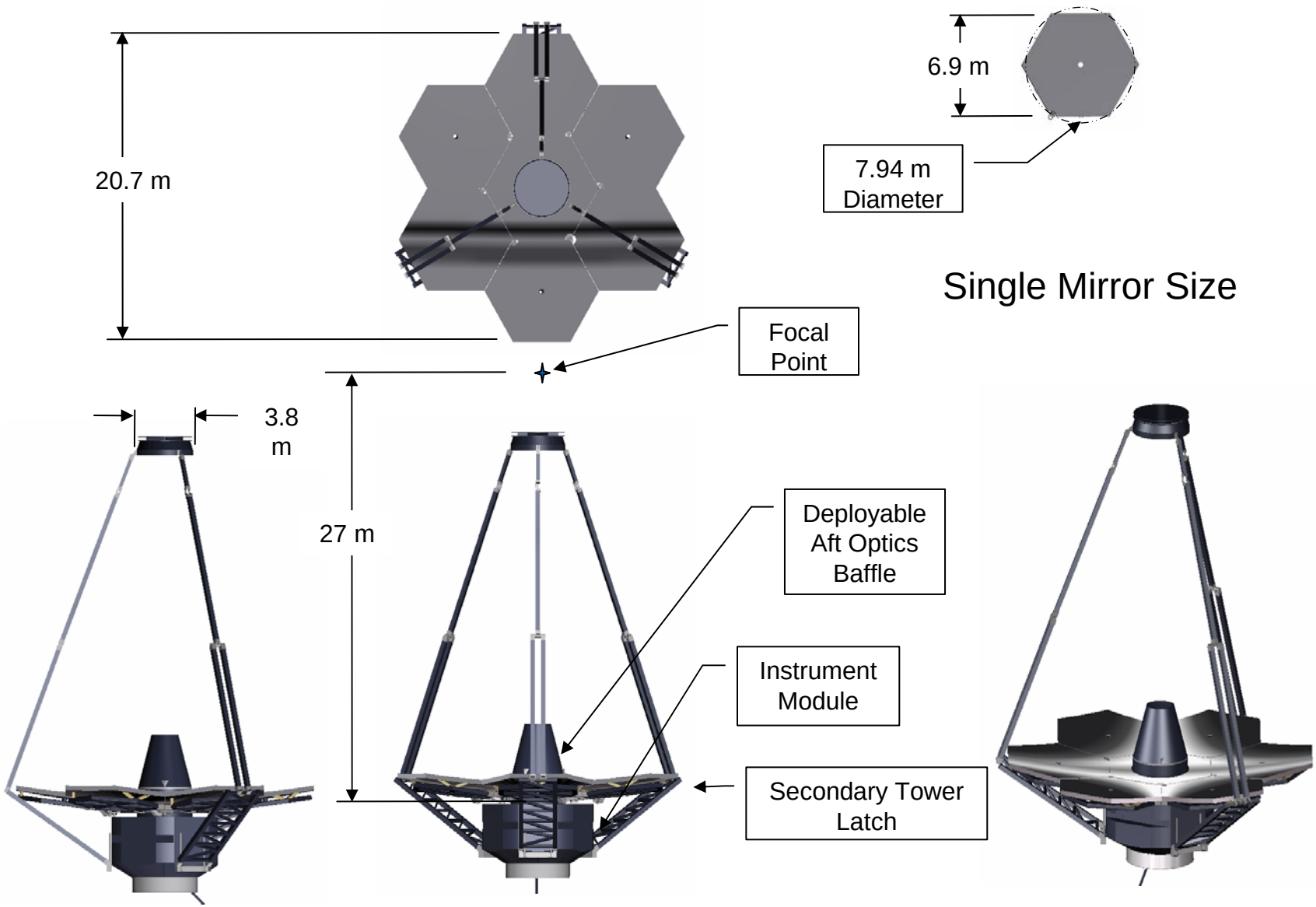

21 Meter Observatory Dimensions

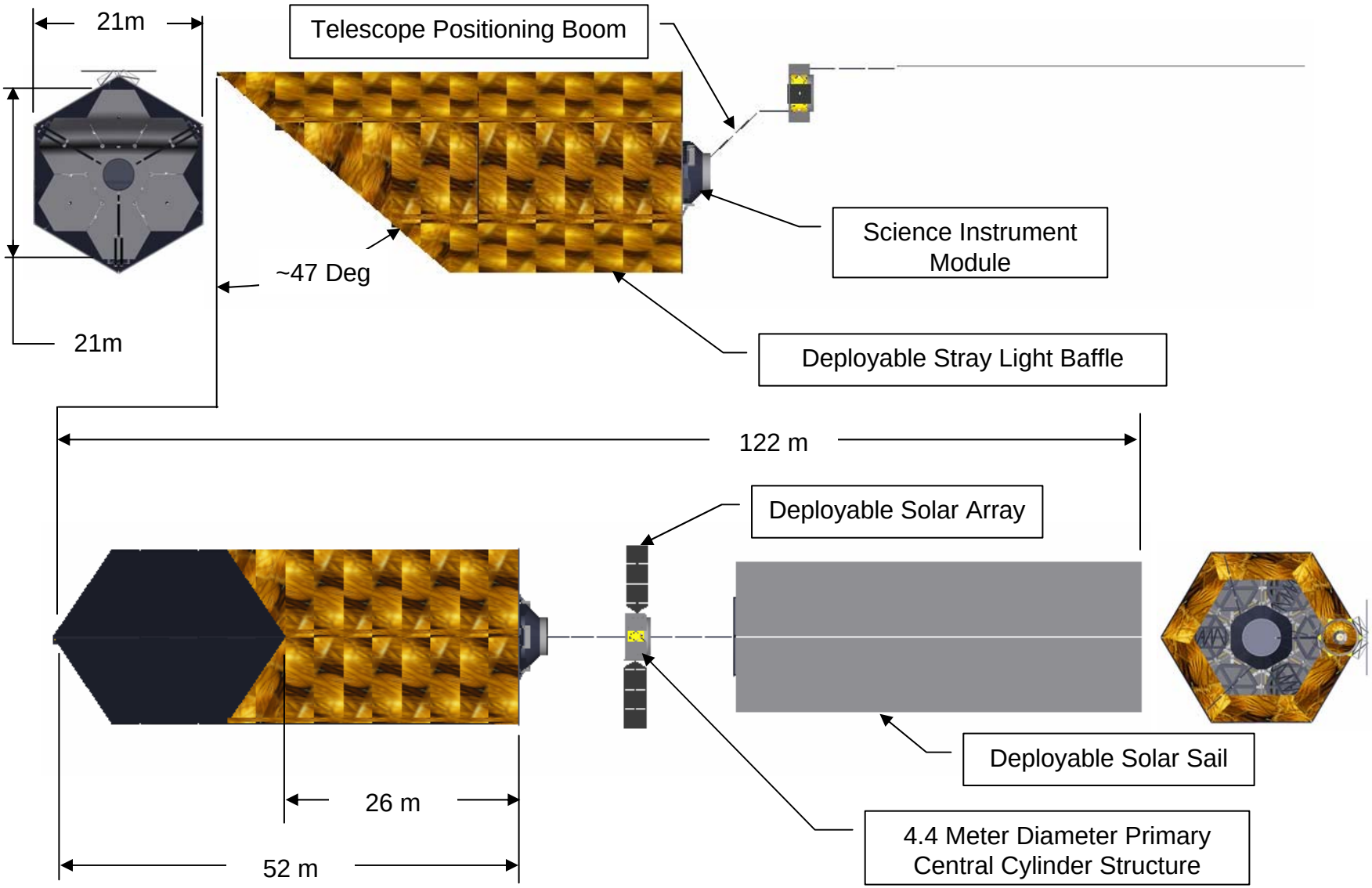

24 Meter Fan-Fold Deployment Telescope

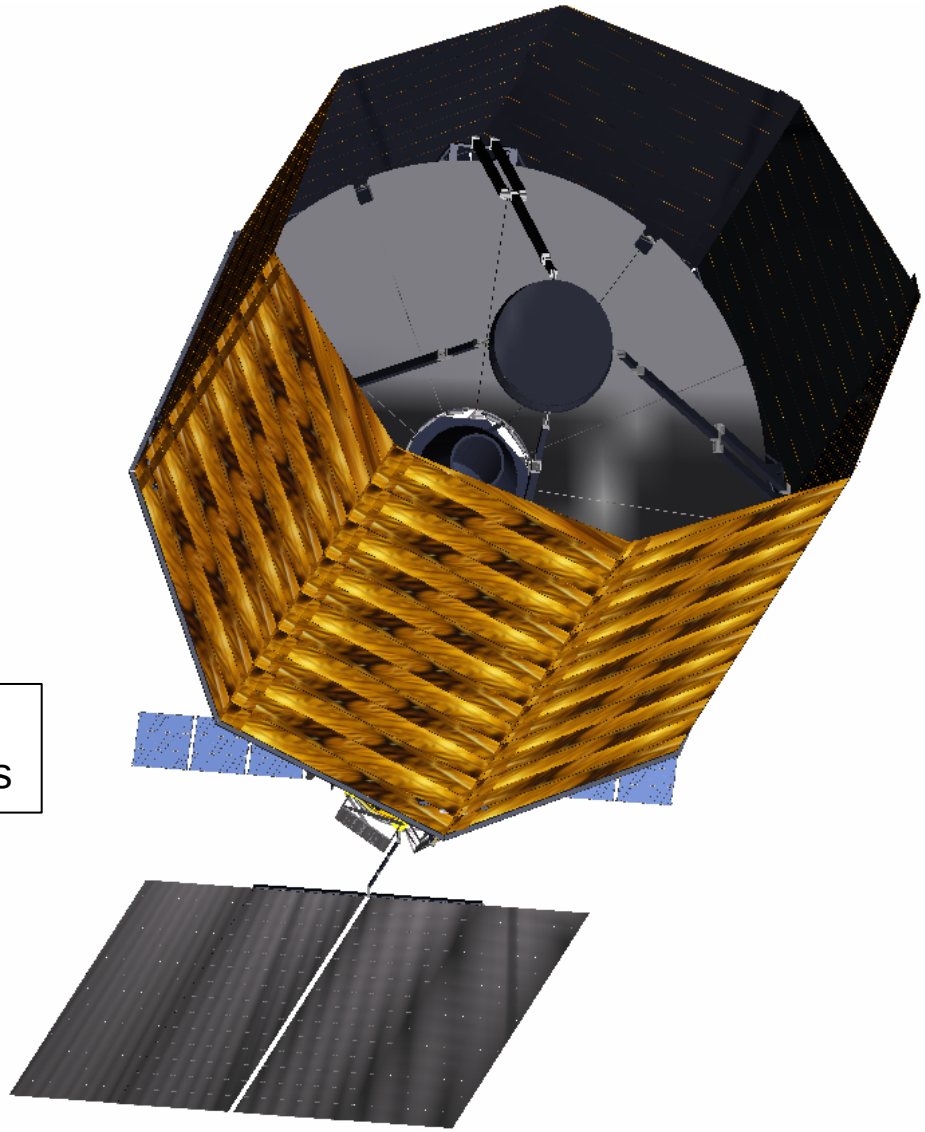

24 Meter Fan-Fold Telescope

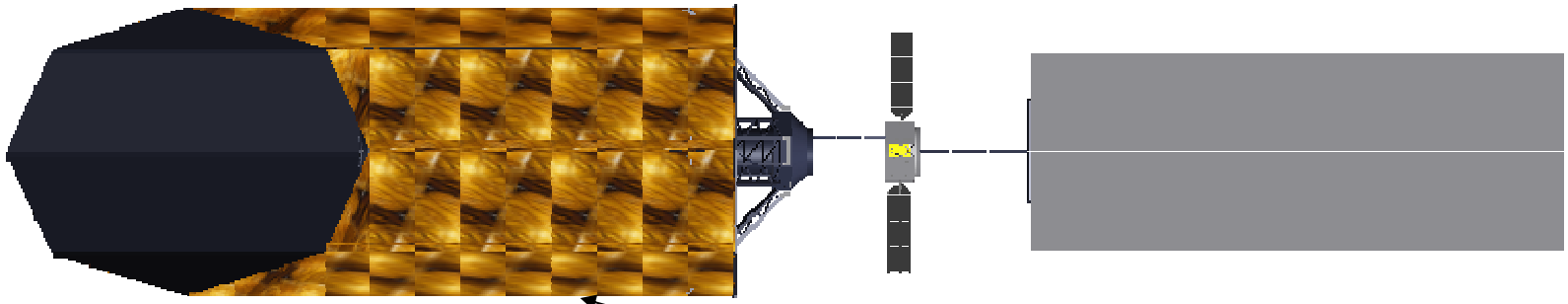

- Stray Light Baffle
- Deployment Options:
  - Accordion Fold
  - Inflatable Structure

24 Meter Circular Telescope

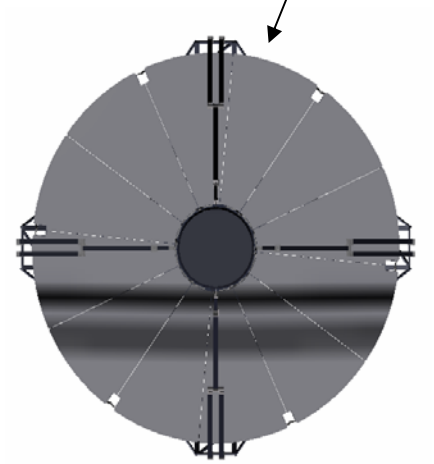

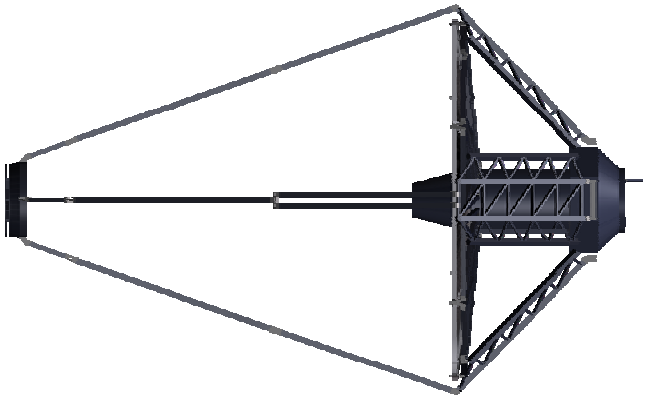

Space Telescope Size Comparison

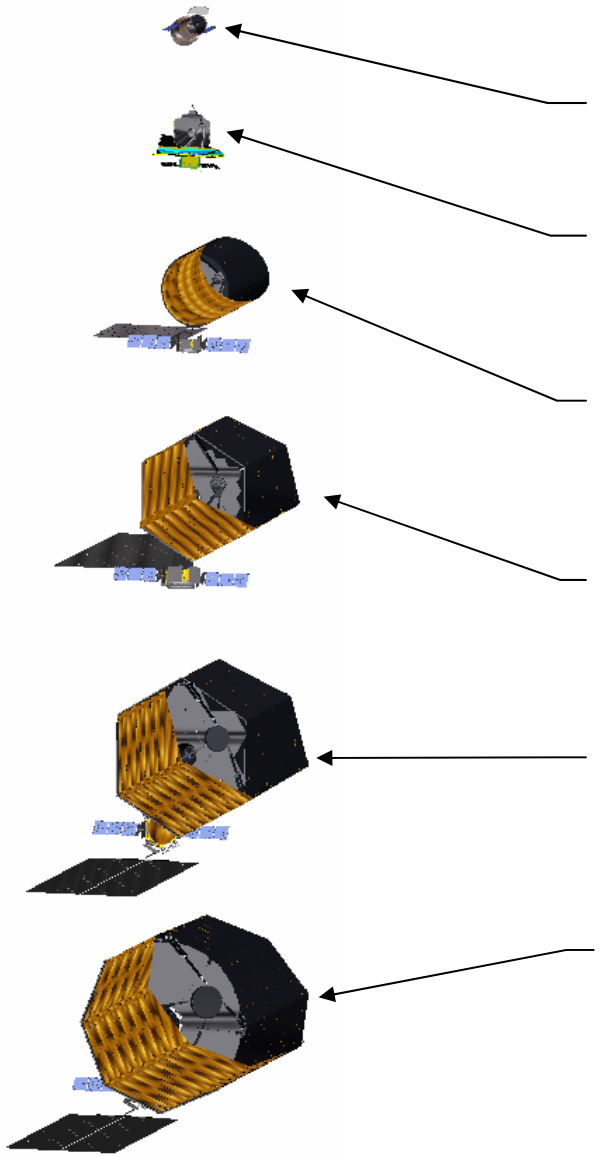

Hubble – 2.4 Meter - 4 m^2 – On Orbit

JWST – 6.6 Meter – 27 m^2 - PDR

10 Meter Chord Fold (in EELV Heavy) – 63 m^2 - Concept

17 Meter Chord Fold (in Ares V) - 178 m^2 - Concept

21 Meter Hex Stack (in Ares V) – 275 m^2 - Concept

24 Meter Fan Fold (in Ares V) – 426 m^2 - Concept

Ares V Fairing Dimensions

- Standard Fairing severely constrains payload packaging, aperture size
  - 12-m vs. 16.8-m aperture for cord fold, for example
- Notional Fairing's Mass, volume, cylinder height well suited for optical payloads
  - Consistent with payload accommodations for current launch vehicles

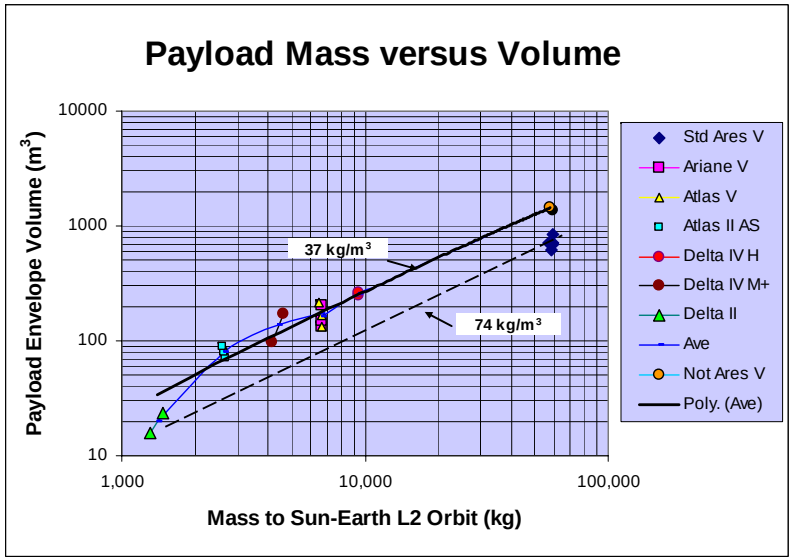

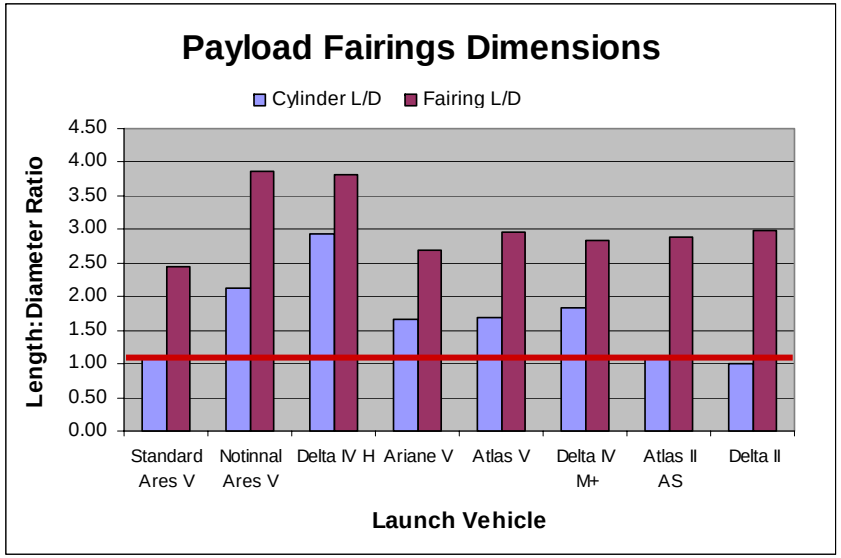

Summary

- The Ares V will enable a new generation of very large space observatories
- Affordable large space observatories can be built in the next decade if they take advantage of newly developed technology and investments in current observatories
- A key element in achieving this goal is a sustained technology development program
- Capabilities are developing that could radically alter how we approach space observatories
  - Larger launch vehicles
  - Constellation Program elements
  - The ability to service and upgrade future large space observatories

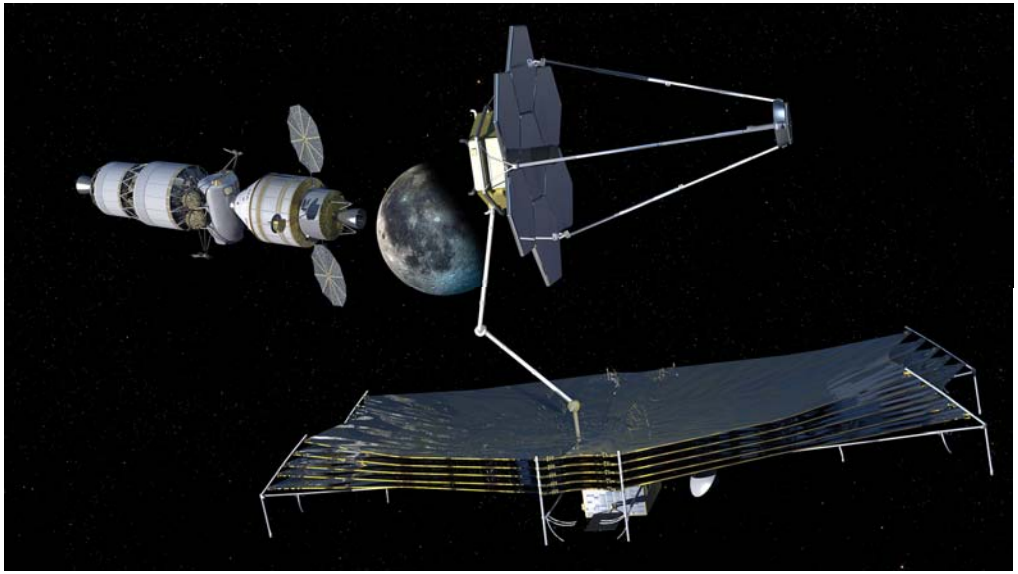

Backup Charts

21 Meter Stacked Hex Observatory Deployment

NGST Has Extensive Experience with Deployable Systems

- Over 45 years of experience in the design, manufacture, integration, verification, and flight operation of deployable systems
- 100% mission success rate
  - > 2200 individual elements
- Have never had a mission failure due to a deployment anomaly

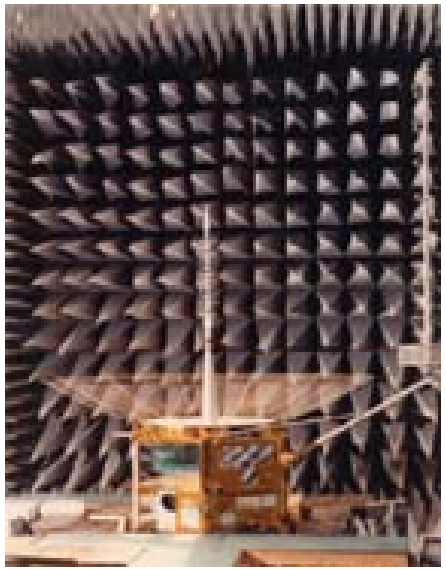

TDRS Deployment

[redacted]

NORTHROP GRUMMAN

DEFINING THE FUTURE